K12VKDP

12” Dry-Pit Solids-Handling Pump

HEAVY DUTY PUMP SERIES

- Handles Aggressive Pumping Applications
- Strong Pumping Capacities to 7700 GPM
- Smooth, Quiet Operation
- Centerline Volute Discharge

STRONG PERFORMANCE

- Non-Overloading Performance Curve
- Pump-Out Vanes Prevent Material Build-up
- Positive Pumping Action through Impeller
- Ideal for Higher Flows

CAPABILITIES:

Flows	to 7700 GPM
Heads	to 125 Feet
HP Range	15 - 150 HP
Voltage/Phase Options	208 / 230 / 460 / 575V, 3 Phase
Discharge Connections	12” ANSI Class 125 Horizontal Flange
Motor Speeds	870 / 1150 / 1750 RPM
Solids Handling	6”
Impeller	Balanced, Enclosed, 2-Vane
Motor Service Factor	1.20
Inlet Elbow Options	10” x 10” or 12” x 10” ANSI Elbow

LONG SERVICE LIFE

- Dual Silicon Carbide Shaft Seals
- Low Motor Operation Temperatures
- Continuously Lubricated Angular Contact Bearings

LOW MAINTENANCE

- Easily Replaceable Impeller Wear Ring Restores Original Pump Performance
- Unobstructed Impeller Passageway
- Grit-Resistant Silicon Carbide Shaft Seals
- Large, 6” diameter Solids-Handling
- High Service Factor Motor Handles Tough Electrical Operating Conditions

K12VKDP - Features and Benefits

CLASS 1, DIV. 1
GROUPS C & D
CONSTRUCTION

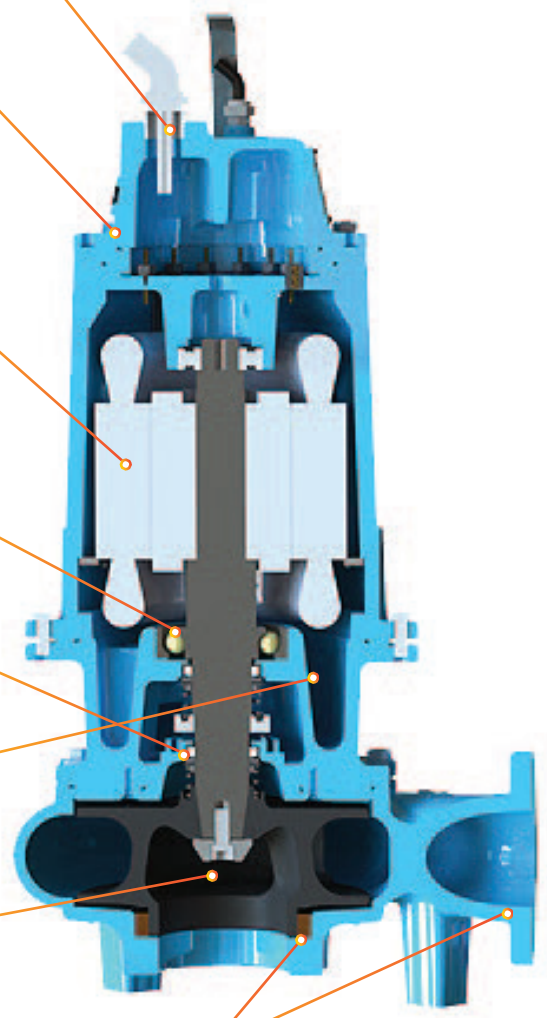

1. WATERTIGHT CABLE ENTRANCE
Agency-approved, watertight strain relief cord grips with compression grommets protects outer cord jacket. Epoxy-filled inner cord cap provides anti-wicking moisture protection to the motor even if power cable is cut or damaged. 40' UL power & control cords. Additional sealing accomplished by terminal plate, separating cord cap from motor housing.

2. MODULAR PUMP DESIGN
Commonality of parts across the Keen product line minimizes the amount of parts required for servicing. Heavy-duty ASTM A48, Class 35 cast iron components.

3. STRONG MOTOR (U.S. MOTOR MANUFACTURER)
Powerful high-torque motor for strong pumping.
208/230/460/575 Volt, 3-phase.
Slip-Fit stator efficiently transfers heat to cast housing. Class H construction with overload protection in oil-filled chamber for cool operation and long motor life. Inverter-duty capable, for VFD / soft start operation.

3A. OIL
Proprietary Keen oil ensures industry-low operating temperatures.

4. SOLID BEARING SUPPORT
Two-bearing design featuring high load-rated angular contact for 100,000 hour B-10 life.

5. SEVERE DUTY DUAL MECHANICAL SEALS
Dual silicon carbide mechanical shaft seals provide twice the moisture and grit protection for the motor. Dual seals are housed in a secondary oil-filled seal chamber. Tougher silicon carbide seals better handle sand, grit and abrasive materials. ** Additional bronze labyrinth seal for explosion-proof model.

6. MOISTURE DETECTION
Seal leak probe signals alarm in control panel for scheduled maintenance.

7. HIGH EFFICIENCY HYDRAULIC DESIGN
Highly efficient enclosed, 2-vane impeller easily passes 6" diameter solids without blockage. Strong, ductile iron impeller features backside pump-out vanes, keeping lower seal clean and pressure-compensated for longer life. Dynamically balanced for smooth, quiet operation and long bearing life.

8. STANDARD FLANGE CONNECTION
12" Horizontal, Class 125 ANSI discharge flange. Industry standard, 12-bolt pattern.

9. HIGH PERFORMANCE WEAR RING
Assists impeller in providing higher performance efficiencies and prevention of recirculation losses. Bronze ring will not corrode or deteriorate from liquid being pumped. Bronze ring reduces wear to stronger ductile iron impeller in sandy or gritty applications. Easily serviceable and replaceable.

PUMP SERIES	K12VKDP	12” DRY-PIT SEWAGE PUMPS

DIMENSIONAL DATA

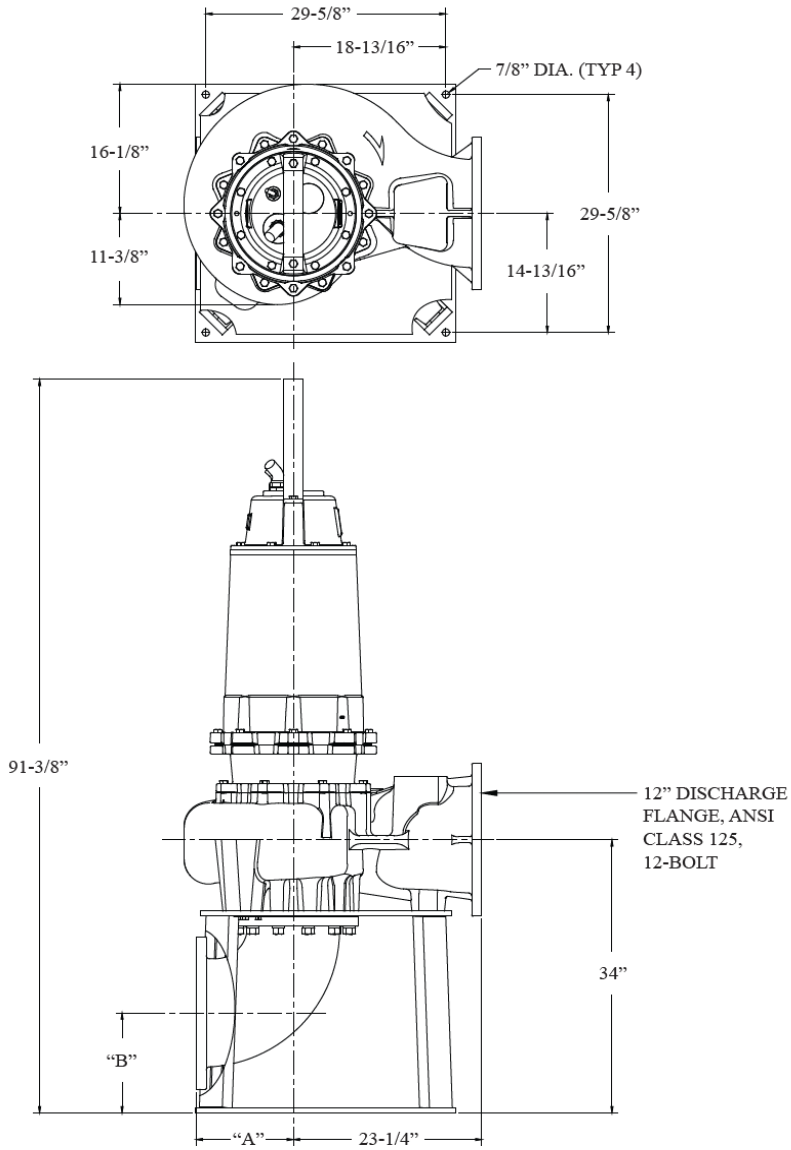

DISCHARGE SIZE	″A″	″B″
10 X 10 ELBOW	11″	13-7/16″
10 X 12 ELBOW	12″	12-7/16″

Note: All dimensions in inches unless noted.
Dimensions may vary due to normal manufacturing tolerances.

File: K12VKDP Dimensions